KGG-TYPE

DIMENSIONS

KGG SERIES

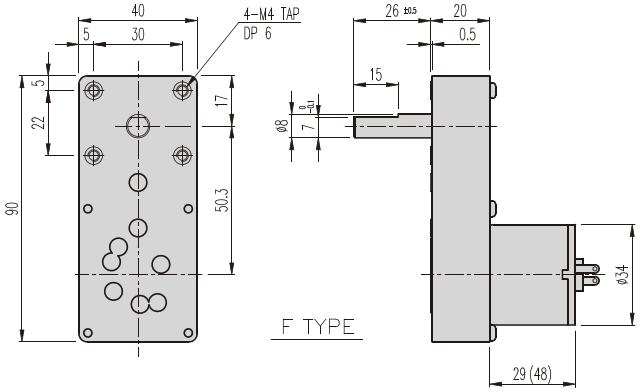

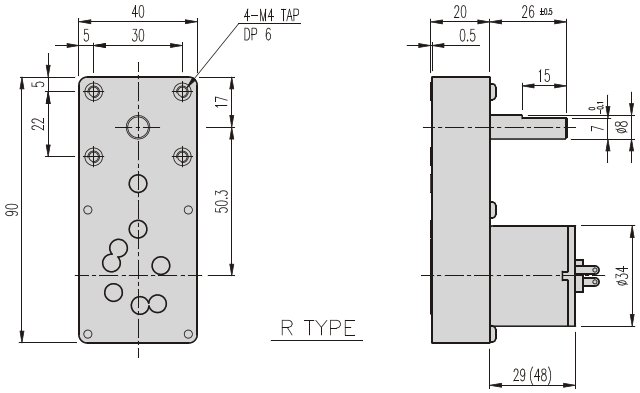

AT MAXIMUM EFFICIENCY (3429 SERIES)

MODEL / GEAR	KD1-3429-050		KD2-3429-050		KD1-3429-075		KD2-3429-075		KD1-3429-095		KD2-3429-095	
	DC 12V		DC 24V		DC 12V		DC 24V		DC 12V		DC 24V	
	rpm	kgf.cm	rpm	kgf.cm	rpm	kgf.cm	rpm	kgf.cm	rpm	kgf.cm	rpm	kgf.cm
1/078	57.7	2	57.7	2	83	2	83	2	102.5	4	102.5	2
1/101	44.6	2.6	44.6	2.6	64.4	2.6	64.4	2.6	79.2	5.2	79.2	2.6
1/227	19.8	5.4	19.8	5.4	28.6	5.4	28.6	5.4	35.2	6	35.2	5.4
1/512	8.8	6	8.8	6	12.7	6	12.7	6	15.6	6	15.6	6

* 색상의 감속비는 MOTOR와 출력축의 회전방향이 같습니다.

AT MAXIMUM EFFICIENCY (3448 SERIES)

MODEL / GEAR	KD1-3448-050		KD2-3448-050		KD1-3448-075		KD2-3448-075		KD1-3448-090		KD2-3448-090	
	DC 12V		DC 24V		DC 12V		DC 24V		DC 12V		DC 24V	
	rpm	kgf.cm	rpm	kgf.cm	rpm	kgf.cm	rpm	kgf.cm	rpm	kgf.cm	rpm	kgf.cm
1/078	57.7	4	57.7	4	83	4	83	4	102.5	4	102.5	4
1/101	44.6	5.2	44.6	5.2	64.4	5.2	64.4	5.2	79.2	5.2	79.2	5.2
1/227	19.8	6	19.8	6	28.6	6	28.6	6	35.2	6	35.2	6
1/512	8.8	6	8.8	6	12.7	6	12.7	6	15.6	6	15.6	6

* 색상의 감속비는 MOTOR와 출력축의 회전방향이 같습니다.